Breadboard Companion™ Power Supply Kit
Schematic of BBCII™

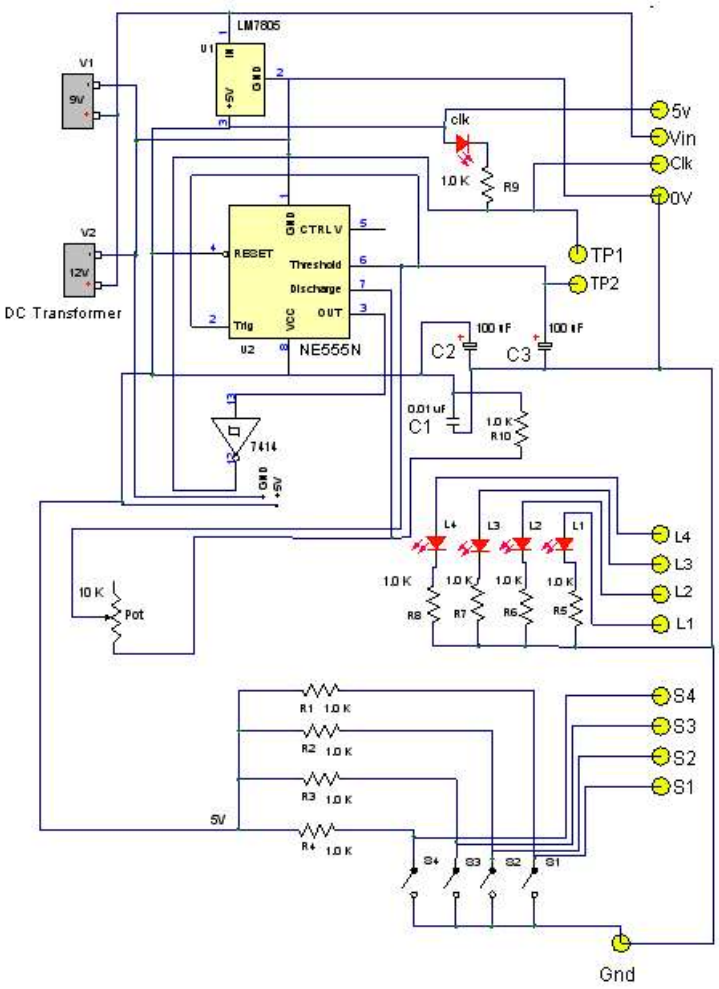

www.breadboardcompanion.com